TABLE OF CONTENTS

1 GENERAL INFORMATION
1.1 How to Use This Manual
1.2 Schematic Symbols
1.3 Abbreviations

2 ELECTRICAL SCHEMATIC
2.1 Power Supply
2.2 Starting System
2.3 Engine Control System
2.4 Machine Control System
2.5 Monitor System
2.6 Sensor & Actuator
2.7 Cab System
2.8 Lighting System

3 HYDRAULIC SCHEMATIC
3.1 Hydraulic System Overview
3.2 Main Hydraulic Circuit
3.3 Swing Circuit
3.4 Travel Circuit
3.5 Pilot Control Circuit
3.6 Attachment Circuit

4 COMPONENT LOCATION
4.1 Electrical Components
4.2 Hydraulic Components

5 CONNECTOR INFORMATION

6 TROUBLESHOOTING
6.1 Electrical System
6.2 Hydraulic System

7 APPENDIX
7.1 Wire Color Codes
7.2 Conversion Table

3.2 MAIN HYDRAULIC CIRCUIT

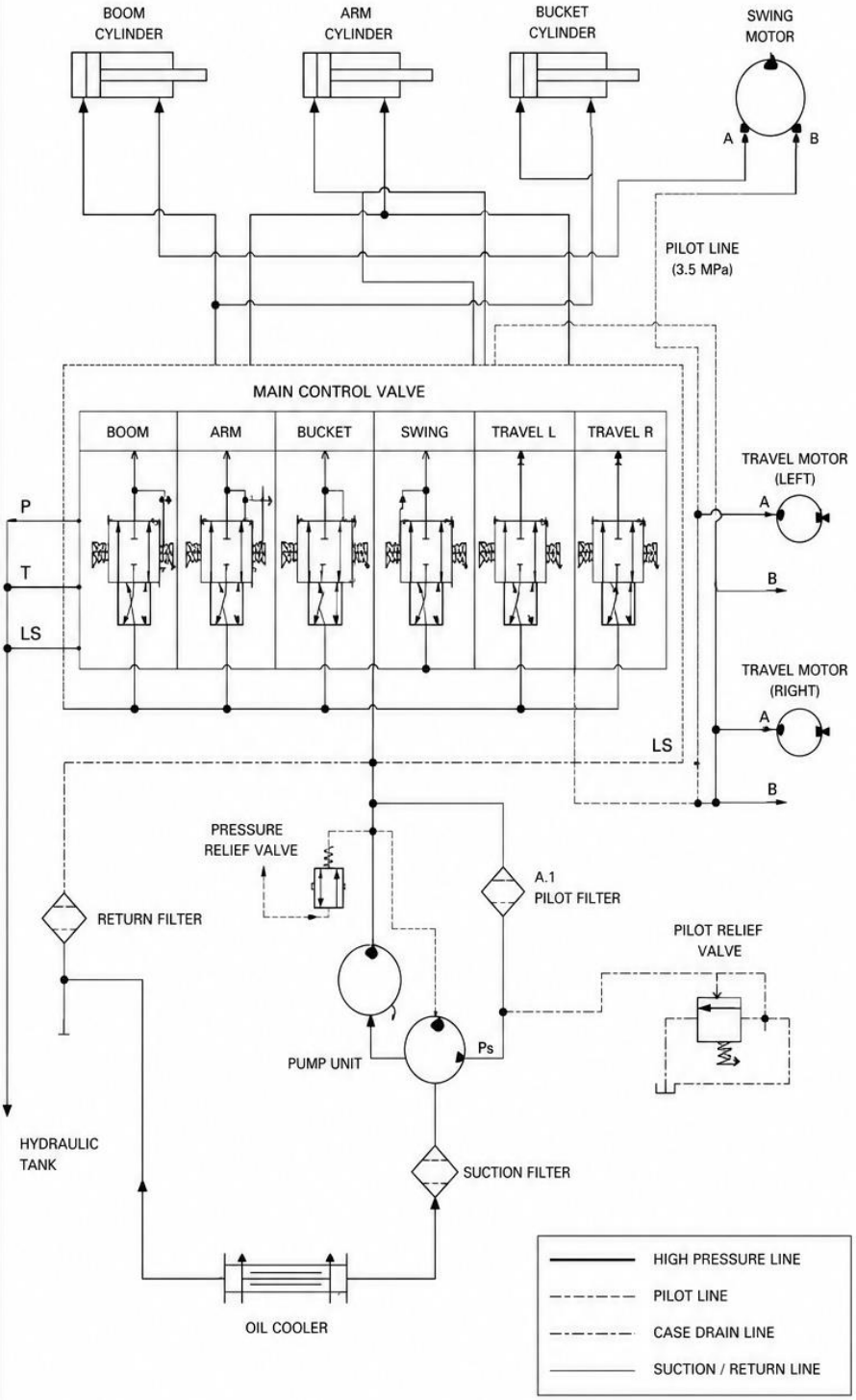

VOLVO CONSTRUCTION EQUIPMENT
PUB. NO. VOE14500239
REV. D MAY 2024

SCHEMATIC IS SUBJECT TO CHANGE WITHOUT NOTICE.

VOLVO UEW240E EXCAVATOR ELECTRICAL & HYDRAULIC SCHEMATIC MANUAL

The VOLVO UEW240E Excavator Electrical & Hydraulic Schematic PDF Manual is an essential technical resource designed for mechanics, technicians, workshop professionals, and equipment owners. This manual provides detailed electrical wiring diagrams, hydraulic circuit schematics, connector layouts, component locations, troubleshooting charts, and system operation information for the Volvo UEW240E wheeled excavator. With clear and accurate schematics, users can efficiently diagnose electrical faults, trace wiring connections, identify hydraulic flow paths, and perform repairs with confidence. The manual covers major machine systems including engine management, lighting, starting and charging systems, sensors, control modules, hydraulic pumps, valves, actuators, and auxiliary hydraulic circuits. Presented in searchable PDF format, this manual helps reduce downtime, improve maintenance efficiency, and ensure proper machine operation in demanding job site conditions.

Volvo UEW240E Electrical Hydraulic Schematic PDF Manual, Volvo UEW240E Wiring Diagram, Volvo UEW240E Hydraulic Circuit Manual, Volvo UEW240E Electrical System Repair Guide, Volvo UEW240E Hydraulic Troubleshooting Manual, Volvo UEW240E Excavator Service Documentation, Volvo UEW240E Workshop Manual PDF, Volvo UEW240E Electrical Schematics, Volvo UEW240E Hydraulic Schematics, Volvo Wheeled Excavator Wiring Manual, Volvo UEW240E Connector Diagram, Volvo UEW240E Electrical Troubleshooting Guide, Volvo UEW240E Hydraulic Flow Diagram, Volvo Construction Equipment Manual, Volvo UEW240E Technical Service Manual, Volvo Excavator Electrical Repair Manual, Volvo UEW240E Maintenance Manual PDF, Volvo UEW240E Diagnostic Guide, Volvo Excavator Hydraulic System Manual, Volvo UEW240E Equipment Repair Documentation.

- VOLVO UEW240E Excavator Electrical & Hydraulic Schematic PDF Manual
- VOLVO UEW240E Electrical Schematic PDF Download
- VOLVO UEW240E Hydraulic Schematic Manual
- VOLVO UEW240E Wiring Diagram PDF
- VOLVO UEW240E Hydraulic Circuit Diagram
- VOLVO UEW240E Electrical Troubleshooting Manual

- VOLVO UEW240E Excavator Wiring Harness Diagram
- VOLVO UEW240E Hydraulic System Schematics
- VOLVO UEW240E OEM Electrical Manual PDF
- VOLVO UEW240E Technical Schematic Guide
- VOLVO UEW240E Heavy Equipment Electrical Manual
- VOLVO UEW240E Workshop Schematic Manual
- VOLVO UEW240E Service Information Manual
- VOLVO UEW240E Electrical & Hydraulic Diagram Guide PDF

United States (USA)

- VOLVO UEW240E Electrical Schematic Manual USA
- VOLVO UEW240E Hydraulic Diagram Guide United States
- VOLVO UEW240E Wiring Diagram America
- VOLVO UEW240E Excavator Electrical Manual USA

United Kingdom (UK)

- VOLVO UEW240E Electrical Hydraulic Schematic Manual UK
- VOLVO UEW240E Wiring Diagram England
- VOLVO UEW240E Workshop Schematic Manual Britain

Canada

- VOLVO UEW240E Electrical Manual Canada
- VOLVO UEW240E Hydraulic Schematic Guide Canadian Edition
- VOLVO UEW240E Excavator Wiring Diagram Canada

Australia

- VOLVO UEW240E Electrical Schematic Manual Australia
- VOLVO UEW240E Hydraulic Diagram Guide Australia
- VOLVO UEW240E Wiring Manual Australia

New Zealand

- VOLVO UEW240E Electrical Manual New Zealand
- VOLVO UEW240E Hydraulic Schematic Guide NZ
- VOLVO UEW240E Excavator Wiring Diagram New Zealand

Europe

Germany

- VOLVO UEW240E Elektrischer Schaltplan Deutschland
- VOLVO UEW240E Hydraulikplan PDF Handbuch
- VOLVO UEW240E Schaltplan Reparaturanleitung

France

- VOLVO UEW240E Schéma Électrique France
- VOLVO UEW240E Schéma Hydraulique Français
- VOLVO UEW240E Manuel Technique Excavatrice

Spain

- VOLVO UEW240E Diagrama Eléctrico España
- VOLVO UEW240E Esquema Hidráulico PDF
- VOLVO UEW240E Manual Técnico Excavadora

Italy

- VOLVO UEW240E Schema Elettrico Italia
- VOLVO UEW240E Manuale Idraulico Italiano
- VOLVO UEW240E Guida Tecnica Escavatore

Netherlands

- VOLVO UEW240E Elektrisch Schema Nederland
- VOLVO UEW240E Hydraulisch Handboek Dutch
- VOLVO UEW240E Technische Handleiding

Sweden

- VOLVO UEW240E Elektriskt Schema Sverige
- VOLVO UEW240E Hydraulisk Manual Swedish
- VOLVO UEW240E Teknisk Handbok

Norway

- VOLVO UEW240E Elektrisk Skjema Norge
- VOLVO UEW240E Hydraulisk Manual Norwegian
- VOLVO UEW240E Teknisk Veiledning

Finland

- VOLVO UEW240E Sähkökaavio Suomi
- VOLVO UEW240E Hydrauliikkaopas Finland
- VOLVO UEW240E Tekninen Käsikirja

Denmark

- VOLVO UEW240E Elektrisk Diagram Danmark
- VOLVO UEW240E Hydraulisk Manual Danish
- VOLVO UEW240E Teknisk Vejledning

Middle East & Africa

UAE

- VOLVO UEW240E Electrical Schematic Manual UAE
- VOLVO UEW240E Hydraulic Diagram Guide Dubai
- VOLVO UEW240E Construction Equipment Manual UAE

Saudi Arabia

- VOLVO UEW240E Hydraulic Schematic Manual KSA
- VOLVO UEW240E Wiring Diagram Saudi Arabia
- VOLVO UEW240E Excavator Technical Guide

South Africa

- VOLVO UEW240E Electrical Manual South Africa
- VOLVO UEW240E Hydraulic Guide Africa
- VOLVO UEW240E Excavator Wiring Diagram South Africa

Asia

Singapore

- VOLVO UEW240E Electrical Manual Singapore
- VOLVO UEW240E Hydraulic Schematic Guide Singapore

Malaysia

- VOLVO UEW240E Wiring Diagram Malaysia
- VOLVO UEW240E Hydraulic Manual Malaysia

Philippines

- VOLVO UEW240E Electrical Guide Philippines
- VOLVO UEW240E Hydraulic Schematic Manual Philippines

Indonesia

- VOLVO UEW240E Diagram Kelistrikan Indonesia
- VOLVO UEW240E Panduan Hidrolik Excavator Indonesia

India

- VOLVO UEW240E Electrical Hydraulic Manual India
- VOLVO UEW240E Excavator Wiring Diagram India
- VOLVO UEW240E Hydraulic Circuit Guide PDF

Americas

Brazil

- VOLVO UEW240E Manual Elétrico Brasil
- VOLVO UEW240E Manual Hidráulico Brazil
- VOLVO UEW240E Diagrama Técnico Escavadeira

Mexico

- VOLVO UEW240E Manual Eléctrico México
- VOLVO UEW240E Diagrama Hidráulico Mexico
- VOLVO UEW240E Guía Técnica Excavadora

- VOLVO UEW240E Excavator Electrical & Hydraulic Schematic PDF Manual Download
- VOLVO UEW240E Wiring Diagram and Hydraulic Schematics
- VOLVO UEW240E Electrical Troubleshooting Guide PDF
- VOLVO UEW240E Hydraulic Circuit Manual Download
- VOLVO UEW240E OEM Electrical & Hydraulic Manual

- VOLVO UEW240E Excavator Schematic Documentation
- VOLVO UEW240E Technical Wiring and Hydraulic Guide
- VOLVO UEW240E Workshop Electrical Schematic Manual
- VOLVO UEW240E Heavy Equipment Hydraulic Diagram PDF
- VOLVO UEW240E Complete Electrical & Hydraulic Schematics Download
- VOLVO UEW240E Service and Repair Schematic Manual
- VOLVO UEW240E Professional Excavator Technical Documentation
- VOLVO UEW240E Instant PDF Manual Download
- VOLVO UEW240E Electrical and Hydraulic System Guide
- VOLVO UEW240E Construction Equipment Schematic Manual PDF

DOWNLOAD NOW